BioChambers
PROVIDING GROWTH TO RESEARCH.

FLEX™ SERIES

FXC-19

Features:

- 1.8m² (20ft²) of plant growth area per tier
- 520mm to 1780mm (20½" to 70") of growth height from 3 tier to 1 tier mode
- 750µmol m^{-2} s^{-1} to 1500µmol m^{-2} s^{-1} PPFD of lighting from 3 tier to 1 tier mode
- Ideal for flexible research requirements - short plant to tall plant conversion
- Converts from 3 tier to 2 tier to 1 tier - no tools, kits, or hardware required
- Small footprint maximizes floor space in the facility
- 760mm (30") deep shelf

FLEX™

Short Plant Mode

Two-Tier Mode

Tall Plant Mode

FLEX™

FLEX™ chambers and rooms can be reconfigured in minutes to suit your research needs (no tools required)

As easy as 1, 2, 3...

1 Hang shelves

2 Plug in and adjust equipment

3 Configure software

BioChambers
PROVIDING GROWTH TO RESEARCH.

FLEX™ SERIES

FXC-19

INTRODUCTION

BioChambers' plant growth chamber model FXC-19 was specifically designed to provide maximum flexibility with shelving modules which can be configured for tall plant research (single tier maximizing growth height, upward airflow providing uniform conditions on a horizontal plane, and a counterbalanced adjustable height lamp canopy maximizing the light intensity) or configured for short plant research (three tiers of shelving maximizing the plant growth area and a perforated back wall delivering horizontal airflow ensuring each tier is under the same environmental conditions). BioChambers' plant growth chambers provide tight uniform control of temperature, a balanced lighting spectrum using a combination of broad spectrum and far-red LED modules, and adjustable airflow.

1.0 CONTROLLER

1.1 Controller Version: BioChambers NEXUS.

1.2 Interface: Fanless panel PC with a 305mm (12") color touch screen.

1.3 Ethernet Connection: Secure remote access using a unique site specific webkey allowing the chambers/rooms to be connected to a facility supplied local area network (LAN)/ internet.

1.4 Security: Multiple levels of password security for researchers, administrators, service technicians, and BioChambers' factory technicians.

1.5 NEXUS Viewer: Instantly view the status of all your experiments. Single or multiple chambers/ rooms can be remotely monitored and operated from a central location via the LAN/internet. NEXUS Viewer can be installed on up to three existing computer stations.

1.6 Schedule: Multi-line schedule can be created for temperature, lighting (day length), light intensity, and fan speed using the touch screen interface or remotely using the facility provided LAN/internet. Available options: humidity, carbon dioxide, auxiliary circuits primarily for automatic watering, etc… can also be scheduled.

1.7 Multi-Day: Multi-day changing environmental conditions can be scheduled.

1.8 Ramping: Temperature and light intensity changes gradually (ramping) from setpoint to setpoint. Available options: humidity and carbon dioxide can also be ramped.

1.9 Astronomical Clock: Researchers can produce photoperiod schedules for locations worldwide by simply entering the latitude and longitude.

1.10 Graphing: Controlled parameters such as temperature, light intensity, and the following available options: humidity and carbon dioxide can be graphed to show setpoint versus actual conditions.

1.11 Research Data: Controller equipped with a memory card to store multiple schedules and logged data such as temperature, alarms, etc... Log rate and duration can be set by the user.

1.12 Data Export: Data can be exported to the researcher's/administrator's computer for further analysis.

1.13 Start-up: Provisions for chamber/room start-up delay in facilities with multiple chambers/rooms helping to reduce the initial inrush current after a power outage.

1.14 Alarms: Notification via e-mails, building alarm contacts connected to a facility supplied building security system, and on chamber/room audible alarm with red indicator light.

1.15 Service Data: Refrigeration system pressures and temperatures along with other service parameters are logged. Log rate and duration can be set independently of the research log.

1.16 Service Screen: Displays compressor discharge and suction pressures and temperatures, facility water supply and return temperatures, automatic temperature setting safety limits status, lamp hours, sensor calibration hours, temperature control valve position, and more.

1.17 Service: On-screen override switches with a 10 minute schedule bypass are provided for the service technician to place the chamber/room into full cooling or heating and all lights on or off. This enables faster and easier service work as the technician does not need to learn how to program a schedule.

FLEX™ SERIES

FXC-19

2.0 CONSTRUCTION

2.1 Exterior Dimensions: 2540mmW x 890mmD x 2820mmH (100”W x 35”D x 111”H) assembled. Add 230mm (9”) to the height to assemble the chamber (custom heights are available).

2.2 Assembly: Chamber splits at a height of 2005mm (79”) for easy installation in the facility.

2.3 Interior Dimensions: 2425mmW x 755mmD (95½”W x 29¾”D).

2.4 Growth Area: Short plant mode 5.31m^2 (57.3ft^2) total on three tiers, two tier mode 3.57m^2 (38.5ft^2) total on two tiers, tall plant mode 1.83m^2 (19.7ft^2).

2.5 Growth Height: Short plant mode 520mm (20½”) each of the three tiers, two tier mode 840mm (33”) each of the two tiers, tall plant mode 1780mm (70”).

2.6 Growth Capacity: Short plant mode 2.8m^3 (98ft^3) total on three tiers, two tier mode 3.0m^3 (106ft^3) total on two tiers, tall plant mode 3.3m^3 (115ft^3).

2.7 Interior: Pre-painted white smooth aluminum.

2.8 Exterior: 22ga. Stainless Steel Type 304 #4 Brushed.

2.9 Lamp Canopies: Non-barriered measuring 730mmD x 1195mmW (28¾”D x 47”W) providing 0.87m^2 (9.4ft^2) of area on each shelf. Top lighting canopies: counterbalanced with ball bearing style pulleys allows fingertip adjustment of the lights vertically. Center lighting canopies: cantilevered from the wall, adjustable height in 75mm (3”) increments, and removable. In short plant mode each of the two shelving modules has three lighted tiers for a total of six shelves. In two tier mode each of the two shelving modules has two lighted tiers for a total of four shelves. In tall plant mode each of the two shelving modules has one lighted tier for a total of two shelves. Maximum weight carrying capacity of 90Kg (200lb) per shelf.

2.10 Drain Pan/Floor: Anodized aluminum floor and drain pan constructed of stainless steel for superior corrosion resistance.

2.11 Insulation: 38mm (1½”) CFC free, high-density expanded polystyrene.

2.12 Electronics: Filtered air blown into the control panel, providing cooling to the electronics and positive pressure in the control panel keeping dust out, extending the life of the electronics.

2.13 Service: Easy access from the front to electronics and mechanical components located on the roof of the chamber.

2.14 Instrument Ports: Two 50mm (2”) with light tight covers.

2.15 Reach-In Doors: Two 840mmW x 1700mmH (33”W x 67”H) with light tight magnetic gaskets and self closing cam-lift hinges.

2.16 Observation Window: One 380mm x 280mm (15” x 11”) dual pane glass window with light tight cover.

2.17 Control Panel: Display mounted on the center of the chamber when facing the doors.

2.18 Aisle/Vestibule: Not applicable.

3.0 AIR TEMPERATURE

3.1 Ambient: Designed for a maximum ambient of 35°C outside the chamber.

3.2 Range: 4°C to 40°C all lights off, 10°C to 35°C all lights on (extended temperature options are available).

3.3 Control: PID control, +/-0.5°C at the aspirated sensor.

3.4 Temperature Limits: Automatically set when the user selects a schedule. One high/low and one lamp safety temperature limit sensor independent of the main temperature sensor.

3.5 Sensor Box: Moveable, aspirated, and sensors are shielded from the radiative heat produced by the lights.

3.6 Temperature Sensor: High precision fast responding thermistor sensor.

4.0 LIGHTING

4.1 Type: LED Fluence modules with two dimmable channels (other lighting options are available).

4.2 Intensity: 750µmol m^{-2} s^{-1} PPFD (Photosynthetic Photon Flux Density measured in the PAR (Photosynthetically Active Radiation) range of 400-700nm) on each tier when configured in short plant mode and 1500µmol m^{-2} s^{-1} PPFD in tall plant mode. Light intensity is measured at 150mm (6”) from the lamp canopy at 25°C and averaged on a 150mm (6”) grid. Top and bottom canopies supplied with all hardware (e.g. lamps, lighting drivers, cables, etc...) required to meet the lighting specification above. No additional kits required.

4.3 Light Source: Combination of Fluence LED modules with PhysioSpec Indoor (R4) broad spectrum and LED modules with PfrSpec far-red spectrum.

4.4 Programming: Via NEXUS controller.

4.5 Light Intensity Control: Two channel dimmable system per tier, total of 6 dimmable channels. PhysioSpec Indoor (R4) broad spectrum LED modules are on one dimming channel and PfrSpec far-red spectrum LED modules are on the second dimming channel. For each channel, users program a percentage setpoint within the dimmable range from 10% to 100% via the controller.

4.6 Lamp Heat: Cooling system sized to remove all heat generated by the lights.

4.7 Light Sensor: One quantum sensor measures PPFD and data is logged by the controller.

FLEX™ SERIES

FXC-19

5.0 COOLING SYSTEM

5.1 Type: Direct expansion cooling system with a water-cooled condenser (other options are available).

5.2 Temperature Valve: No maintenance electronic proportional hot gas bypass system for close temperature control and continuous compressor operation.

5.3 Compressor: Scroll compressor.

5.4 Coolant: HFO based R-449a or R-448a.

5.5 Cooling Coil: Copper tube and aluminum fin construction.

5.6 Analysis: Compressor discharge pressure, suction pressure, and temperatures are logged for ease of service. Facility water supply and return temperatures are also logged.

5.7 Safety: One suction pressure switch and one discharge pressure switch is provided for the refrigeration system to prevent short cycling and compressor burn out.

5.8 Barriered Lamploft: Not applicable.

5.9 Defrost Cycle: Not applicable.

6.0 AIR DISTRIBUTION

6.1 Air Flow: Short plant mode and two tier mode horizontal back-wall airflow through shaped plenums and perforated walls to provide uniform conditions on each tier of shelving, tall plant mode vertical upward airflow through an anodized aluminum open channel floor providing uniform conditions on a horizontal plane.

6.2 Fan Type: Energy efficient electronically commutated (EC) motor with built in fan speed control and tach output.

6.3 Fan Speed: Can be programmed from 50% to 100% in the controller, enabling researchers to vary the airflow through the plants (85% or higher recommended, temperature gradients increase at lower fan speeds).

6.4 Fresh Air: Filtered fresh air with a manually adjustable vent: 1.7m^3/min (60ft^3/min).

7.0 RESEARCH SAVER

7.1 Surge Protector: Over voltage protection of the controller and control circuit from electrical surges.

7.2 Capacitor Back-up: Provides time for soft shutdown of the controller.

7.3 Power Phase Detector: Loss of power phase alarm protects the compressor and other components.

7.4 Air Flow: Tach output of each fan displayed in the controller with automatic low rpm alarm to detect fan failure.

7.5 Factory Diagnostics: Through a facility supplied LAN/internet connection a BioChambers' factory technician can remotely access the chamber/room to analyze the mechanical, electrical, and control systems.

7.6 Testing: 100% assembled, tested, and run-in at the factory before being disassembled for shipment to the site reducing on-site assembly time and disruptions.

7.7 Quality Standard: ISO 9001:2015 certified company.

8.0 WARRANTY

8.1 Duration: Two years parts and labor.

8.2 Diagnostics: Additional years three to five remote diagnostics service.

9.0 ELECTRICAL

9.1 Service: 120/208V/3-phase/60Hz/4 Wire + ground (50Hz option: 240/415V/3-phase/50Hz/4 Wire + ground). Electrical service to be provided by others (contact BioChambers for utility requirements).

9.2 Electrical Safety: Chamber/Room is CSA inspected (CE where applicable).

10.0 INSTALLATION & CUSTOMER TRAINING

10.1 Manuals: Controller manual, operation & maintenance manual, and electrical schematics provided.

10.2 Training: Please consult with BioChambers for training options.

10.3 Installation: Please consult with BioChambers for installation options.

FLEX™ SERIES

FXC-19

Available Options

BioChambers Rooms and Chambers are available with a variety of options and accessories. If your research has specific requirements, BioChambers can outfit your equipment to meet your needs. These are just a few of the standard options we have available. Ask for more information.

T5 FLUORESCENT LIGHTING

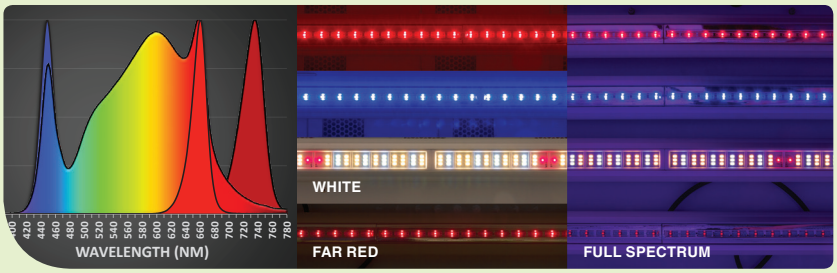

ADJUSTABLE SPECTRUM LED LIGHTING

ADDITIVE HUMIDITY SPRAY NOZZLES

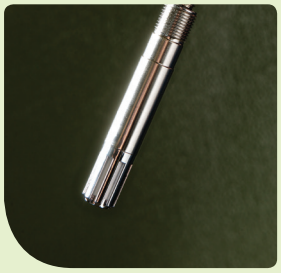

RELATIVE HUMIDITY DATA LOGGING

DEHUMIDIFICATION BY DESSICANT

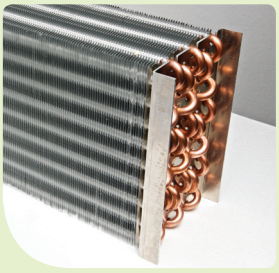

DEHUMIDIFICATION BY REFRIGERATION

PPFD DATA LOGGING

CUSTOM GROWTH HEIGHT

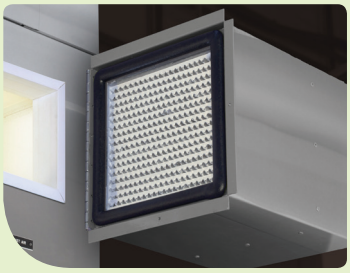

CONTAINMENT HEPA FILTRATION

CONTAINMENT +/- PRESSURE

PROGRAMMABLE RECEPTACLE

EXTENDED WARRANTY

REMOTE AIR COOLED CONDENSER (AC or EC MOTOR)

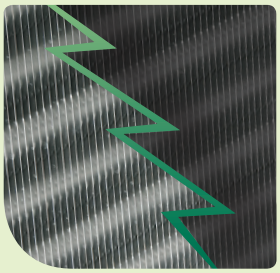

EVAPORATOR COATING

ADDITIVE CO_2

CO_2 SCRUBBER

LOW TEMPERATURE DEFROST

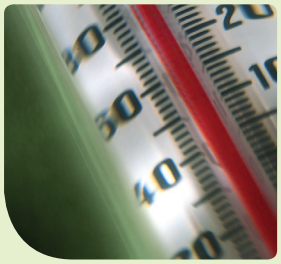

EXTENDED TEMPERATURE RANGE

DRIP IRRIGATION

PROGRAMMED OUTPUT IRRIGATION

EBB & FLOW IRRIGATION

FLEX™ SERIES

FXC-19

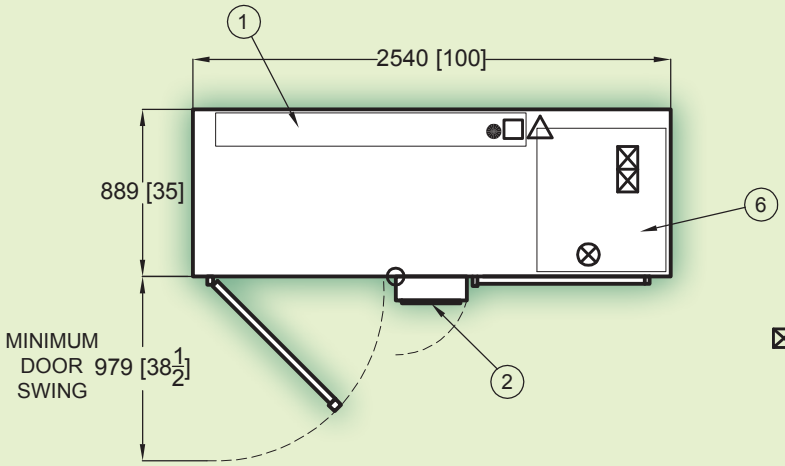

Metric (mm) [Imperial (")]

- □ - Ethernet connection
- ⊗ - Purified water connection (if humidity option selected)
- ● - Electrical connection
- ○ - Ø1-1/8" Drain location
- ⊠⊠ - Cooling water or refrigeration line connections for condenser
- △ - Electrical line connections for air-cooled condenser (if option selected)

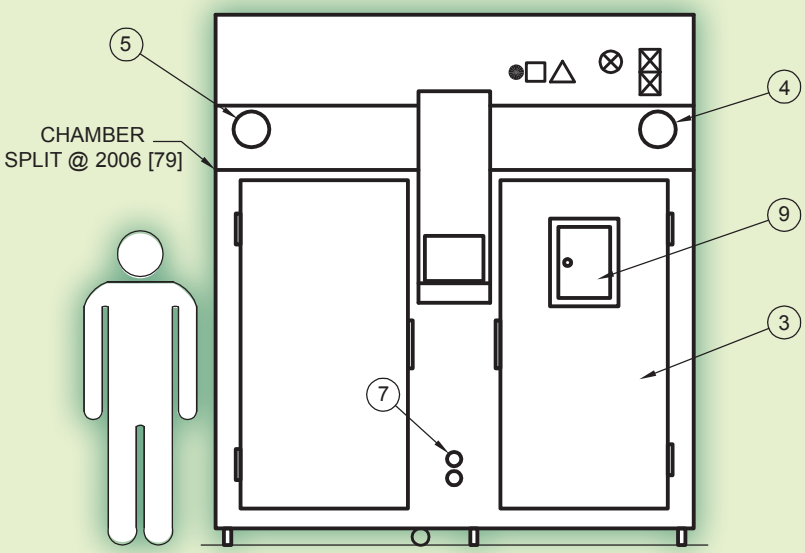

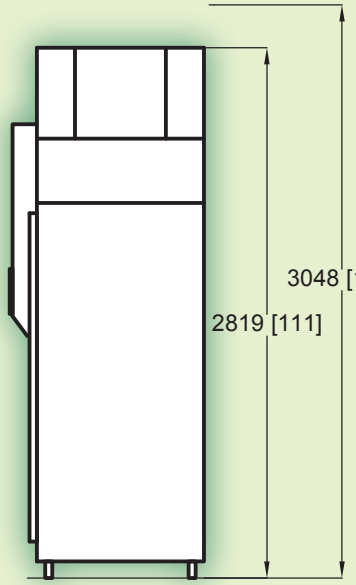

BIOCHAMBERS CAN MANUFACTURE THIS PRODUCT AT CUSTOM HEIGHTS TO ACCOMMODATE CEILING OBSTRUCTIONS.

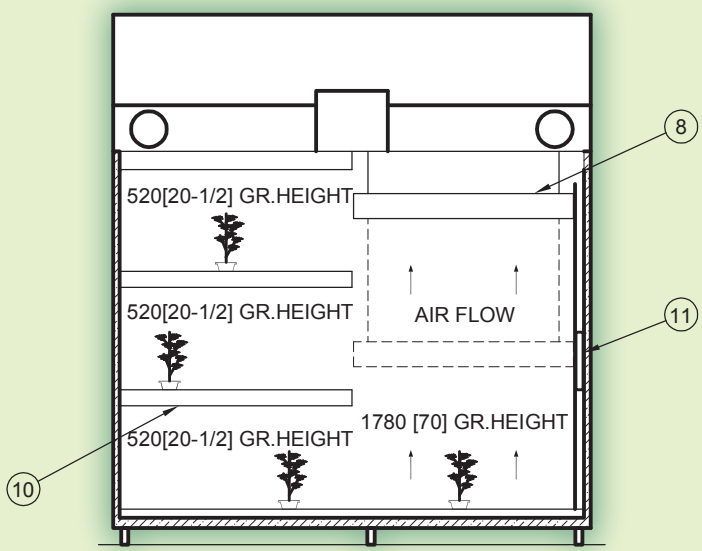

SHORT PLANT MODE TALL PLANT MODE

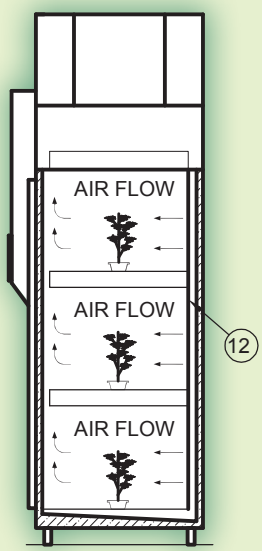

SECTIONED SIDE VIEW

1. Control Panel
2. Touch Screen Interface
3. Door Opening 840 [33] x 1700 [67]
4. Fresh Air
5. Exhaust Air
6. Cooling System
7. Instrument Ports
8. Lighting Drivers
9. Viewing Window
10. Adjustable Height Lamp Canopy
11. Counter Weight
12. Air Plenum

FLEX™ SERIES

FXC-19

BioChambers
PROVIDING GROWTH TO RESEARCH.

Biochambers FXC-19 Specifications version 2024-04A.

biochambers.com